送信機系統図 TS-590SG/ DG/ VG

KENWOOD

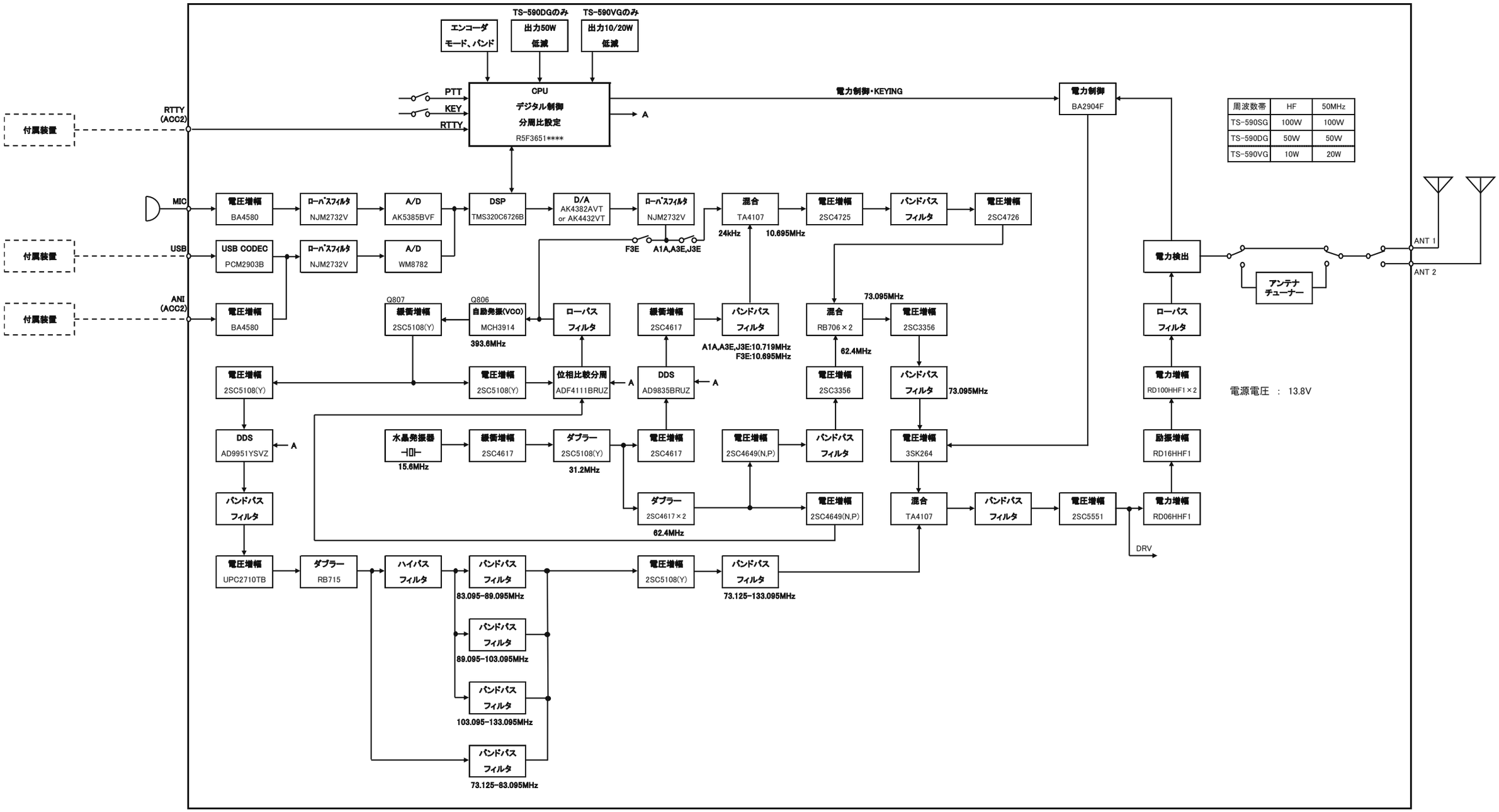

周波数帯	HF	50MHz
TS-590SG	100W	100W
TS-590DG	50W	50W
TS-590VG	10W	20W

© 2021 JVCKENWOOD Corporation