送信機系統図 TS-890S/ TS-890D

KENWOOD

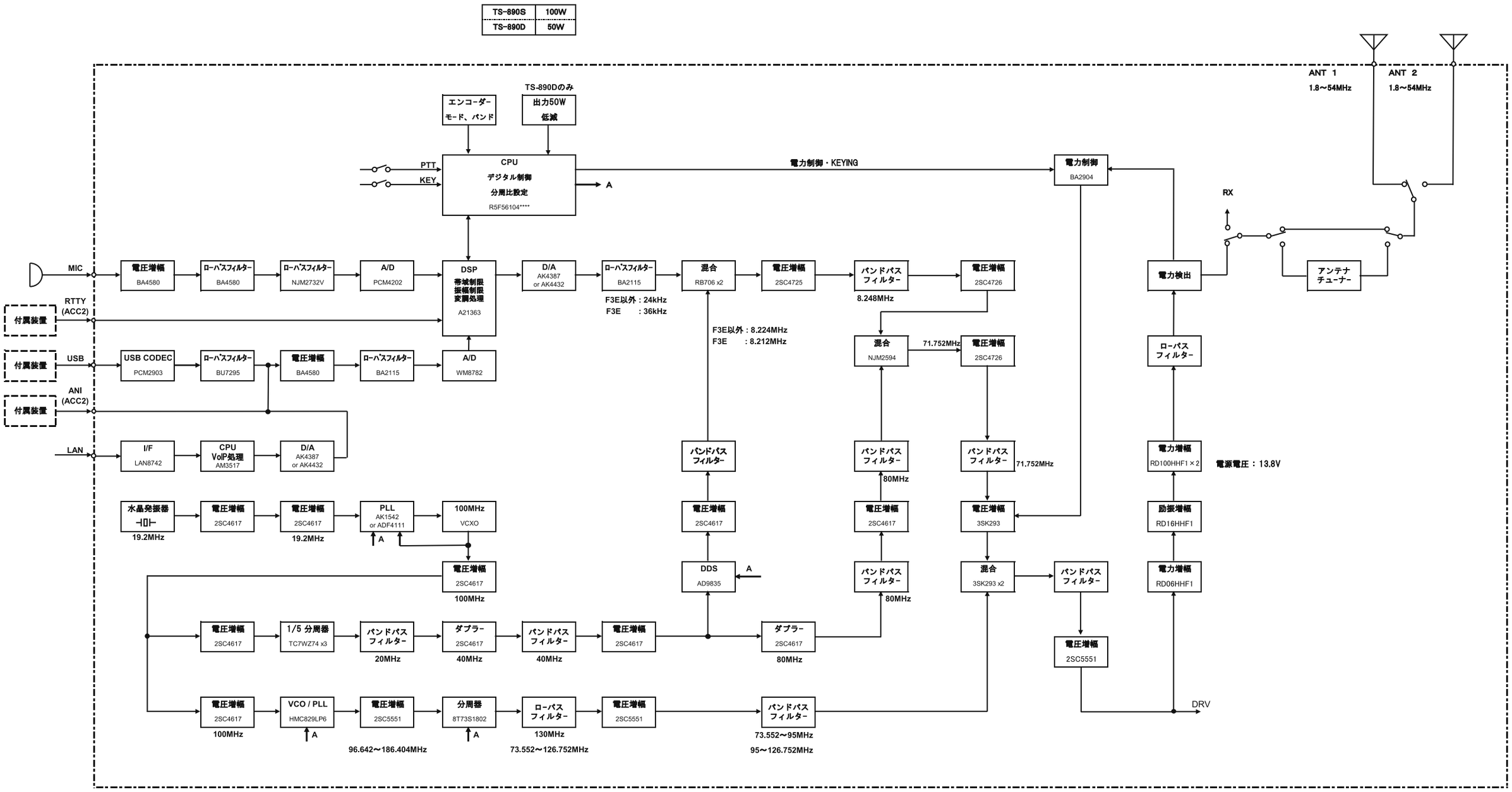

© 2022 JVCKENWOOD Corporation